GRAND STRAND RETINA CENTER ASC REMODEL

4310 HWY 17, MURRELLS INLET, SC 29576

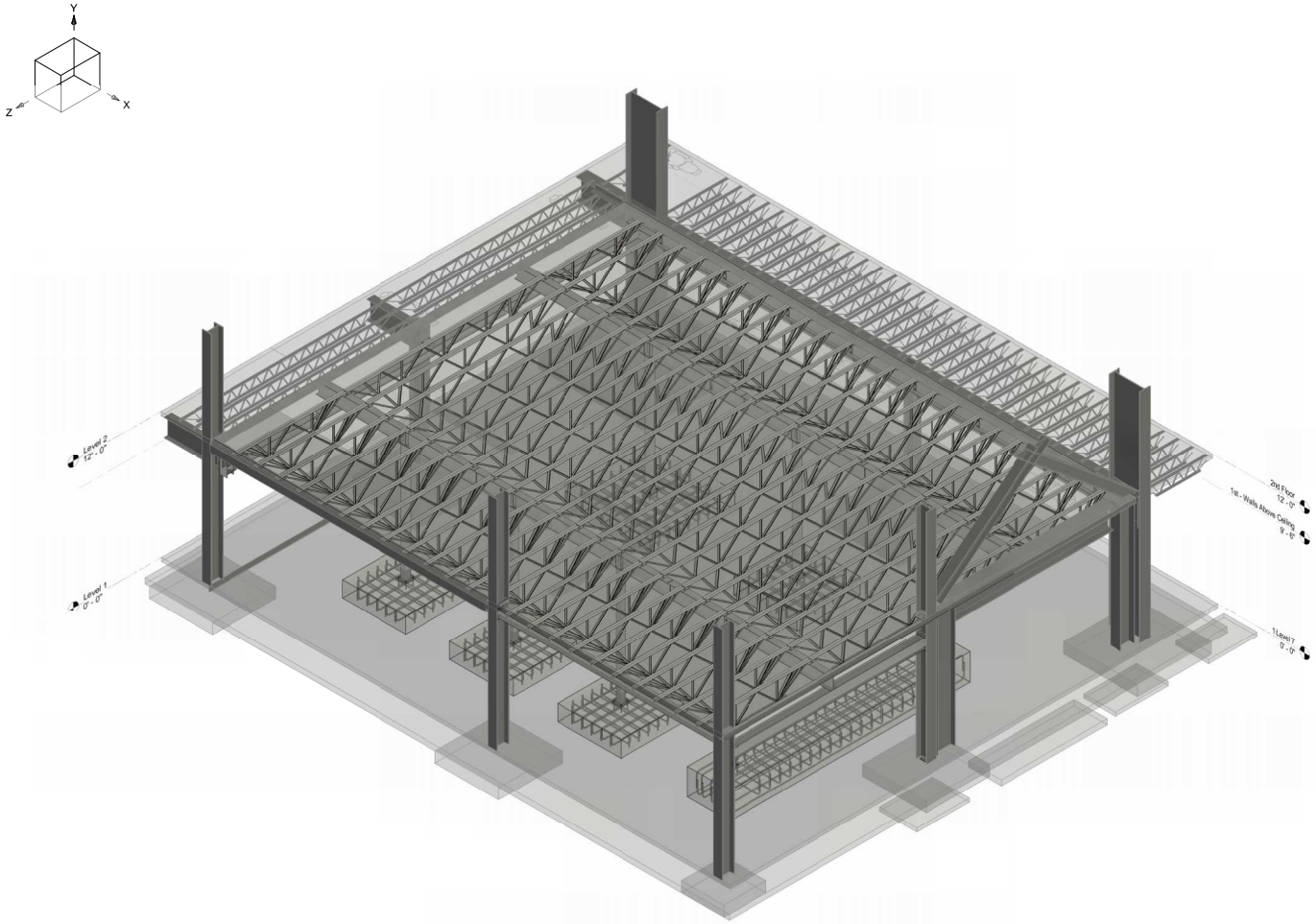

APPROVAL QUESTIONS

QUES #	ITEM IN QUESTION	RESPONSE
1	PLEASE VERIFY CLOUDED JOIST SPACING.	
2	NOT USED	
3	APPROVER, PLEASE VERIFY OR CONFIRM THE DIMENSIONS FROM GRID E TO CHANNEL FACE SHOWN CLOUDED ON APPROVAL DRAWING.	
4	NOT USED	
5	NOT USED	
6	APPROVER, PLEASE VERIFY/SUPPLY CLOUDED JOIST DESIGNATIONS SHOWN ON PLAN DRAWING.	
7	NOT USED	
8	PLEASE SUPPLY CLOUDED EXISTING BEAM DESIGNATIONS.	
9	PLEASE PROVIDE/CONFIRM THE EDGE OF JOIST (EOJ) VALUE.	
10	PLEASE PROVIDE THE JOIST BEARING CONDITION FOR THE CLOUDED TWO JOISTS ALONG GRID LINE E.	
11	APPROVER, PLEASE SUPPLY EXISTING COLUMN DESIGNATION.	

DRAWING INDEX

SHEET #	DESCRIPTION
JE1.01	GENERAL NOTES & TYPICAL DETAILS
JE2.01	FLOOR JOIST PLACEMENT PLAN
JE4.01	JOIST SECTIONS

AVAILABLE CONTRACT DRAWINGS

DATE	DESCRIPTION
03/13/2024	S.001, S.002, S.003, S.101, S.102, S.103, S.301, S.302, S.303, S.304, S.501, S.502, S.503, S.504

HORIZONTAL BRIDGING

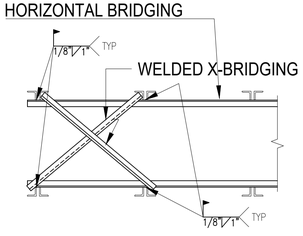

CUT BRIDGING LENGTHS TO FIT AT END OF RUNS. WHEN REQUIRED INSTALL ALL DROPS, OBTAINED FROM CUTTING WITHIN SUBSEQUENT BRIDGING RUNS TO AVOID ANY POTENTIAL SHORTAGES OF BRIDGING MATERIAL. REFERENCE " TYPICAL CONNECTION DETAIL FOR: HORIZONTAL BRIDGING AT LAPS", FOR FURTHER INSTALLATION REQUIREMENTS.

TYPICAL INSTALLATION DETAIL FOR:
HORIZONTAL BRIDGING

REFERENCE: NOT PROVIDED

	WS	WL
K & LH	5/8"	1"
DLH	?	?

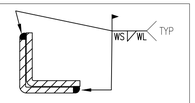

SECTION A–A

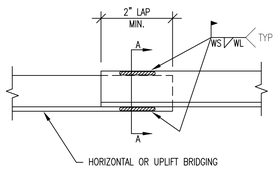

TYPICAL INSTALLATION DETAIL FOR:
CONTINUOUS HORIZONTAL BRIDGING
(LAP DETAIL)

KEY NOTE	K-SERIES & LH SERIES 02-06	LH SERIES 07-17	DLH-SERIES 18-25	CJ SERIES SEAT DEPTH ≥ 5"	JOIST GIRDERS
(A)	2"	4"	6"	4"	4"
* (B)	6"	9"	13"	9"	9"

* SOMETIMES THE DESIGNS FOR THE JOIST BEARING SEATS MAY REQUIRE WIDER SEAT MATERIAL THAN THE MINIMUM BEARING SUPPORT WIDTHS SPECIFIED ON THIS DETAIL. THEREFORE, IT IS RECOMMENDED THAT YOU CONSULT W/ JOIST SUPPLIER PRIOR TO FABRICATION OR INSTALLATION OF JOIST BEARING SUPPORTS TO CONFIRM BEARING WIDTH REQUIREMENTS.

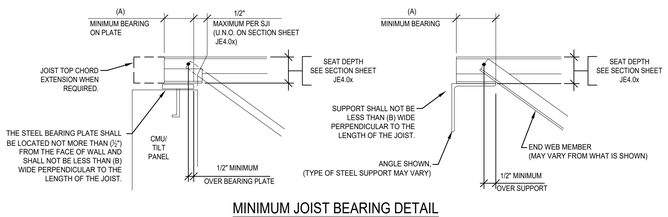

MINIMUM JOIST BEARING DETAIL

SEE THE PROJECT SPECIFIC SECTIONS WITHIN THIS SET FOR EXACT JOIST PLACEMENT. THIS SECTION CONVEYS THAT SJI MINIMUM BEARING LENGTHS AND TYPICAL WIDTH ALLOWANCES SHALL BE RESPECTED UNLESS SPECIFICALLY COORDINATED OTHERWISE WITH JOIST SUPPLIER.

ERECTOR NOTE:

JOIST SEATS FABRICATED TO ALLOW FOR BOLTED ANCHORAGE ALSO REQUIRE A FINAL WELDED CONNECTION, BUT THE BOLTS SHALL BE INSTALLED. IF BOLTS ARE NOT INSTALLED, AND IF PERMITTED BY THE EOR, THEN THE INSIDE EDGE OF THE SEAT SLOTS MUST BE WELDED, AS SHOWN. ADDITIONAL WELD AS REQUIRED TO MEET THE TOTAL SPECIFIED SHALL BE PLACED AT A LOCATION ON THE EDGE OF THE SEAT AWAY FROM THE OUTER EDGE OF THE SLOT.

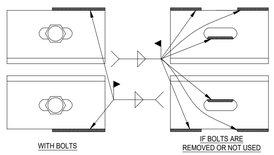

BOLTED JOIST CONNECTION DETAIL

NOTE #A

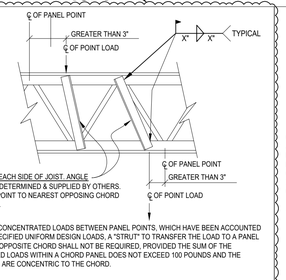

FOR NOMINAL CONCENTRATED LOADS BETWEEN PANEL POINTS, WHICH HAVE BEEN ACCOUNTED FOR IN THE SPECIFIED UNIFORM DESIGN LOADS, A "STRUT" TO TRANSFER THE LOAD TO A PANEL POINT ON THE OPPOSITE CHORD SHALL NOT BE REQUIRED, PROVIDED THE SUM OF THE CONCENTRATED LOADS WITHIN A CHORD PANEL DOES NOT EXCEED 100 POUNDS AND THE ATTACHMENTS ARE CONCENTRIC TO THE CHORD.

TYPICAL INSTALLATION DETAIL FOR:
JOIST REINFORCEMENT AT CONCENTRATED LOADS

REFERENCE: NOT PROVIDED

HORIZONTAL BRIDGING REMOVAL:

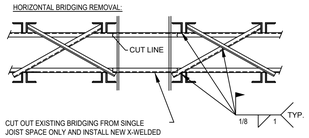

CUT OUT EXISTING BRIDGING FROM SINGLE JOIST SPACE ONLY AND INSTALL NEW X-WELDED BRIDGING AT EACH TOP AND BOTTOM CHORD BRIDGING ROW LOCATION ON EACH SIDE OF OPENING AS SHOWN ABOVE. IF DECK IS IN PLACE, NEW X-WELDED BRIDGING IS ONLY REQUIRED AT BOTTOM CHORD BRIDGING LOCATIONS.

NOTE:
X-WELDED BRIDGING SHOWN ABOVE IS NOT BY JOIST SUPPLIER.

BOLTED X-BRIDGING REMOVAL NOTE:
AFTER JOIST ERECTION BOLTED X-BRIDGING MAY BE REMOVED FROM A SINGLE JOIST SPACING. IF BOLTED X-BRIDGING REMOVAL IS REQUIRED IN TWO CONSECUTIVE JOIST SPACINGS CONTACT JOIST SUPPLIER ENGINEER.

SINGLE JOIST SPACE
DISCONTINUOUS BRIDGING PLACEMENT

DRAWING LEGEND

(00'-0") = ELEVATION
[0"] = SEAT DEPTH (WHEN NON-STANDARD)
<0.0K> = AXIAL LOADS
ES = ERECTION STABILITY BRIDGING (MUST BE IN PLACE PRIOR TO RELEASING HOISTING LINES.)
+0.0K = POINT LOAD - AMOUNT WRITTEN ABOVE THE LINE
▶ = MOMENT CONNECTION
* = SPECIAL USE
(XX) = DENOTES JOIST CONNECTION
(XX) = DENOTES GIRDER CONNECTION
"U" = INDICATES X-WELDED BRIDGING TO BE PLACED AT FIRST BOTTOM CHORD PANEL POINTS. ALL OTHER X-WELDED ROWS TO BE EQUALLY SPACED BETWEEN THE FIRST BOTTOM CHORD PANEL POINTS.
???? = ELEVATION CHANGE
= MAY BE USED TO INDICATE BOLTED SEAT CONNECTION

TC = TOP CHORD
BC = BOTTOM CHORD
EOG = END OF GIRDER
EOJ = END OF JOIST
JBE = JOIST BEARING ELEVATION
DT = DANGER JOIST - NOT DESIGNED TO SUPPORT AN EMPLOYEE WITHOUT BRIDGING INSTALLED. SEE ERECTOR NOTES FOR ADDITIONAL INFORMATION.
TJ = TIE JOIST
TOJ = TOP OF JOIST
BOA = BACK OF ANGLE
BOC = BACK OF CHANNEL
FOW = FACE OF WALL
IFW = INSIDE FACE OF WALL
EJ = EXPANSION JOINT
VIF = VERIFY IN FIELD

REFER TO SHEET JE1.01
FOR GENERAL NOTES

ALL JOIST & BRIDGING WILL BE PAINTED WITH ONE COAT SJI STANDARD GRAY DIP PRIMER. IF **UNPAINTED** JOIST ARE REQUIRED, THESE AREAS **MUST BE CLEARLY NOTED** ON THESE DRAWINGS.

NOTE #B

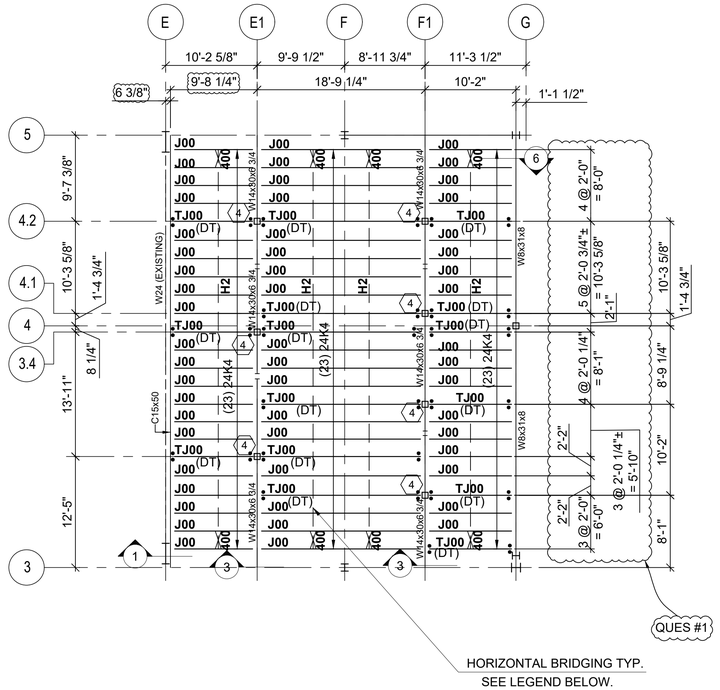

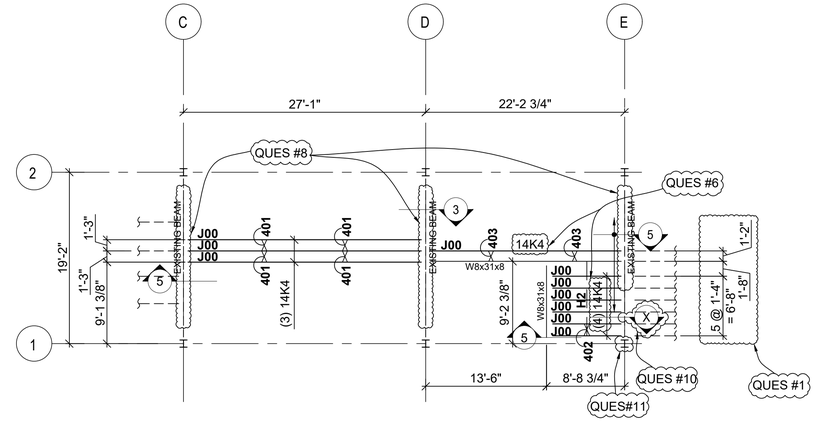

NORTH

LEVEL 2.2 FLOOR FRAMING-ELEVATOR JOIST PLACEMENT PLAN

SEQ. #01J

REF. : 2/S.103

1. THE TAG END OF THE JOIST IS THE END AT WHICH THE PIECEMARK IS LOCATED.
2. REFERENCE DWG JE1.01 FOR LEGEND, SYMBOLS & ABBREVIATIONS.
3. FOR JOIST SECTIONS SEE JE4.01.
4. FLOOR JOIST-NO UPLIFT.

NORTH

LEVEL 2.1 FLOOR - INFILL JOIST PLACEMENT PLAN

SEQ. #01J

REF. : 1/S.103

1. THE TAG END OF THE JOIST IS THE END AT WHICH THE PIECEMARK IS LOCATED.
2. REFERENCE DWG JE1.01 FOR LEGEND, SYMBOLS & ABBREVIATIONS.
3. FOR JOIST SECTIONS SEE JE4.01.
4. ⬡ DENOTES JOIST CONNECTION (TYPE SEE JE4.01).
5. ALL JOISTS BEARING COL'S ARE HSS6x6 TYP.
6. FLOOR JOIST-NO UPLIFT.

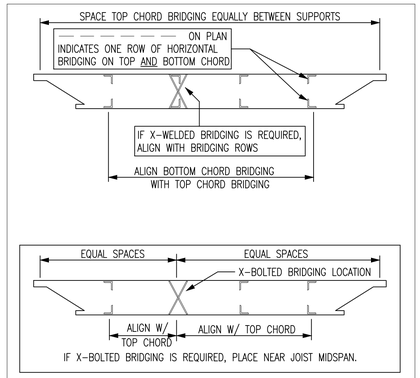

TYPICAL BRIDGING SPACING @ FLOOR

NOTE: BRIDGING ROW QUANTITY'S WILL VARY.
(SEE JOIST ERECTION PLANS FOR BRIDGING ROW REQUIREMENTS.)

BRIDGING LEGEND WITH ANGLE SIZE

400 = WELDED-X BRIDGING. IDENTIFIED ON PLACEMENT PLAN BY MARKS 400 – 799
- L 1 1/4x1 1/4x0.109

H# = CONTINUOUS ROW OF HORIZONTAL BRIDGING AT TOP AND BOTTOM CHORD, IDENTIFIED BY MARKS H1 – H6 ON PLACEMENT PLAN. REFERENCE TYPICAL BRIDGING SPACING DETAIL ON EACH PLACEMENT PLAN FOR SPACING REQUIREMENTS, UNLESS SPECIFIC LOCATIONS ARE SHOWN.
- H2 = L 1 1/4x1 1/4x0.109

FOR APPROVAL ONLY
NOT FOR CONSTRUCTION

REFER TO SHEET JE1.01
FOR GENERAL NOTES

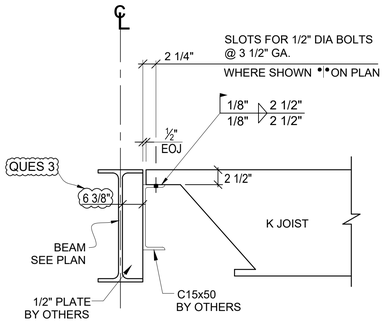

JOIST SECTION 1

REF. : 1/S.502
BOLTS BY OTHERS

NOT USED

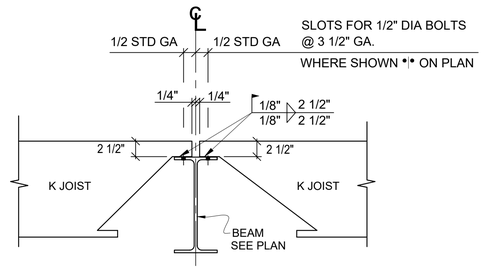

JOIST SECTION 3

REF. : 2, 3/S.502, 7/S.303
BOLTS BY OTHERS

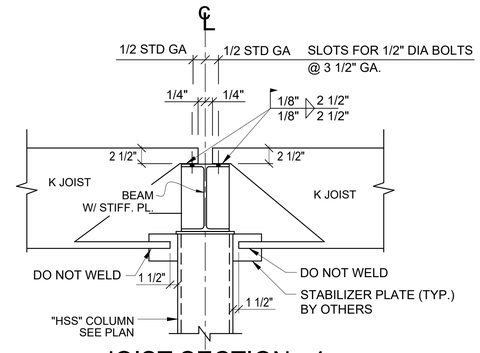

JOIST SECTION 4

REF. : 2, 3/S.502
BOLTS BY OTHERS

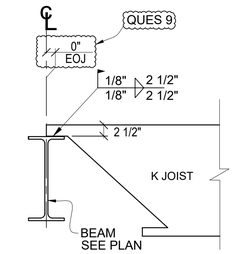

JOIST SECTION 5

REF. : 2, 8/S.303
BOLTS BY OTHERS

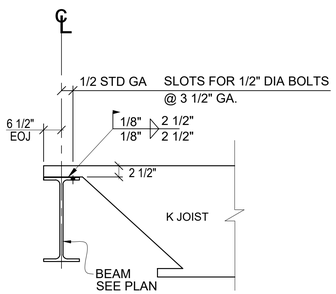

JOIST SECTION 6

REF. : 4/S.502, 1, 4/S.503
BOLTS BY OTHERS

FOR APPROVAL ONLY
NOT FOR CONSTRUCTION

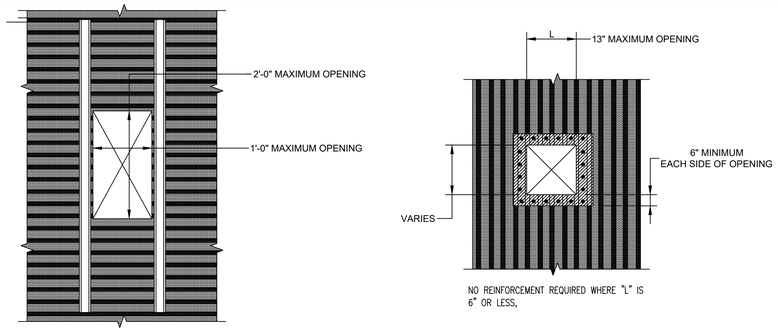

TYPICAL DETAIL FOR:

DECK REINFORCEMENT AT UNFRAMED FLOOR OPENINGS

REFERENCE: DECK REINFORCEMENT MATERIAL AND FASTENERS ARE NOT SUPPLIED BY OMD.

Type 2" COMP.

2" "Composite Deck"

F_y = 50 ksi

■ PROFILE:

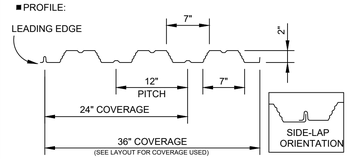

■ FINISH: (SEE LAYOUT FOR FINISHES USED)
HOT-DIPPED GALVANIZED - (ASTM A653)
PHOSPHATIZED TOP / PAINTED BOTTOM - (ASTM A1008)

DRAWING INDEX

SHEET #	DESCRIPTION
DE1.1	FLOOR DECK TYPICAL DETAILS & LEGEND
DE1.3	FLOOR DECK SECTIONS
DE2.1	LEVEL 2.1 FLOOR FRAMING–INFILL DECK LAYOUT PLAN

AVAILABLE CONTRACT DRAWINGS

DATE	DESCRIPTION
03/13/2024	S.001, S.002, S.003, S.101, S.102, S.103, S.301, S.302 S.303, S.304, S.501, S.502, S.503, S.504

APPROVAL QUESTIONS

QUES #	ITEM IN QUESTION	RESPONSE
4	Approver, Please confirm there is no deck, shown clouded on plan dwgs, as per revised dwgs dated on 03/13/2024, detail #1, 4/S.303 & #1, 2, 4/S.504 not showing any metal deck at this area.	
5	Approver, Please verify or supply all joist spacing shown clouded on Approval drawing.	
6	Approver, Please verify or confirm the dimensions from grid E to channel face shown clouded on approval drawing.	
7	Approver, Please confirm as per revised dwgs dated on 03/13/2024, Roof deck (1 1/2" deck) indicate on detail #1, 2/S.304 for Level 3.1 Roof Framing on 3/S.103 is our scope of work or not. If yes then we need the information regarding deck gage, finish, ksi information along with the structural dimensions, edge of deck (EOD) dimension & fastener pattern info for this deck area.	

SECTION NOTES

1) AS SECTIONS DRAWING REPRESENT A GENERAL PICTURE OF CUTS AT VARIOUS LOCATIONS ON PLANS, ACCESSORIES SHOWN MAY HAVE DIFFERENT MARKS TO SUIT EACH CONDITION. PLEASE REFER TO PLANS TO IDENTIFY APPROPRIATE MARK NUMBERS ATEACH LOCATION.

2) EDGE OF SLAB FORMED BY OTEHRS UNLESS ACCESSORY (POUR STOP) MARK NUMBER SHOWN.

3) FIELD CUT AND SUPPORT DECK AS REQUIRED TO SUIT, AT LOCATIONS OF MOMENT / COVER PLATES, ON BEAMS / PLATE GIRDERS AND / OR AT WIND GIRDER DIAGONAL BRACING CONNECTIONS, BY OTHERS.

4) "SP" WHEN SHOWN - INDICATES SEE PLAN VIEW FOR INFORMATION.

DECK LEGEND

BOA	BACK OF ANGLE
BOC	BACK OF CHANNEL
BOD	BOTTOM OF DECK
BM	BEAM
℄	CENTERLINE
COL	COLUMN
EOA	EDGE OF ACCESSORY
EOD	EDGE OF DECK
EPS	EDGE OF POURSTOP
FD	DIMENSION TO BE DETERMINED IN FIELD
IFOW	INSIDE FACE OF WALL
OFOW	OUTSIDE FACE OF WALL
JST	JOIST
HSS	HOLLOW STRUCTURAL STEEL
UNO	UNLESS NOTED OTHERWISE
VIF	VERIFY IN FIELD
START DECK	SUGGESTED ERECTION STARTING POINT
★	FIELD CUTTING OF DECK REQUIRED
⩘	TEMPORARY SHORING OF DECK REQUIRED SHORING IS BY OTHERS NOT BY O'DONNELL METAL DECK
1.5 - CC1	ACCESSORY (SEE PLAN AND SCHEDULE) 1.5 DENOTES THE QUANTITY CC1 DENOTES THE MARK REFERRING TO THE ACCESSORY SCHEDULE
*	POUR STOP NOTED WITH *** (PSx*) DENOTES THE POUR STOP MUST BE INSTALL PRIOR TO DECK
⊠	FIELD CUT OPENING BY OTHERS SEE TYPICAL DETAIL ON THIS SHEET

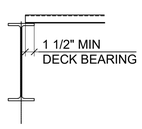

MIN. DECK BEARING ON "STRONG" DIRECTION

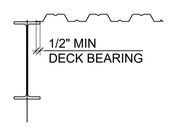

MIN. DECK BEARING ON "WEAK" DIRECTION

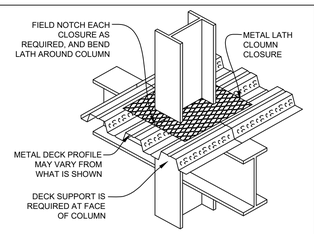

TYPICAL INSTALLATION DETAIL FOR:
COLUMN CLOSURE

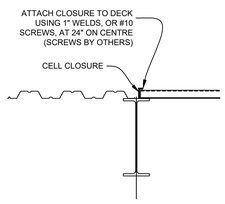

CELL CLOSURE
ATTACHMENT DETAIL

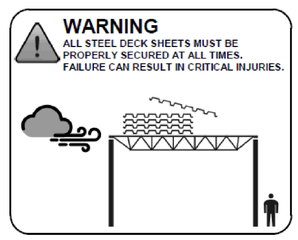

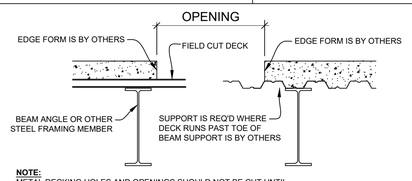

NOTE:
METAL DECKING HOLES AND OPENINGS SHOULD NOT BE CUT UNTIL IMMEDIATELY PRIOR TO BEING PERMANENTLY FILLED WITH THE EQUIPMENT OR STRUCTURE NEEDED OR INTENDED OTHERWISE, FOLLOW SAFETY ORDINANCES GOVERING PROTECTIVE MEANS.

TYPICAL FIELD CUT OPENING AT SLAB WITHOUT POUR STOP INDICATED

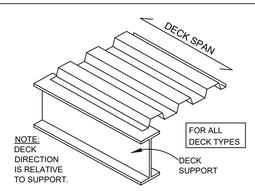

"WEAK" DIRECTION
APPLIES TO ALL DECK TYPES

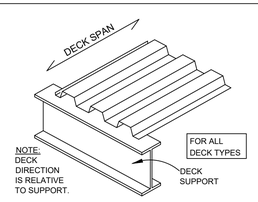

"STRONG" DIRECTION
APPLIES TO ALL DECK TYPES

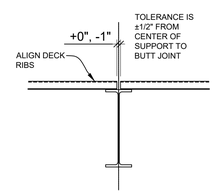

TYPICAL DECK BUTT @ SUPPORT

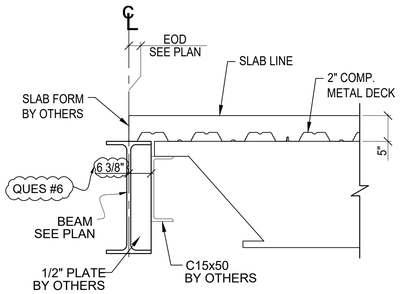

DECK SECTION 1

REF. : 1/S.502, 1/S.301

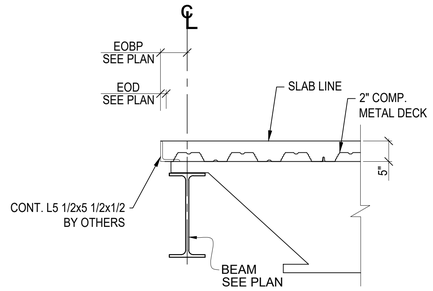

DECK SECTION 2

REF. : 4/S.502, 1/S.301

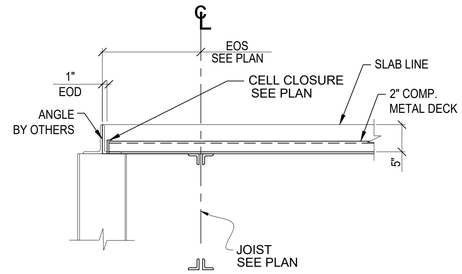

DECK SECTION 3

REF. : 1/S.302, 2/S.301

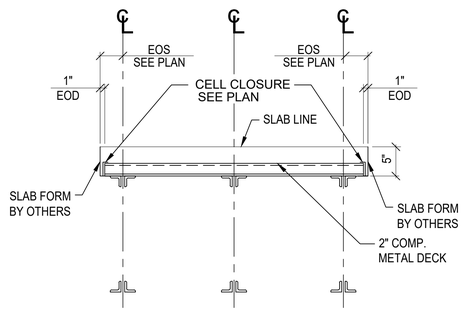

DECK SECTION 4

REF. : 3/S.303

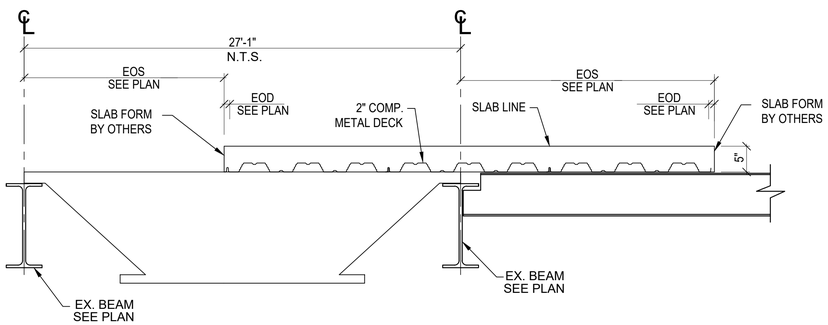

DECK SECTION 5

REF. : 1, 2/S.303

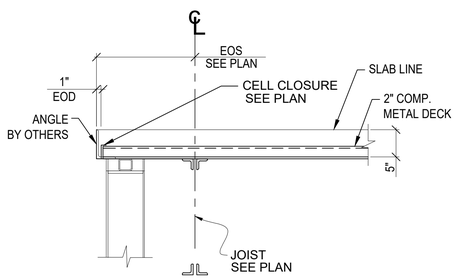

DECK SECTION 6

REF. : 1/S.302, 4/S.301

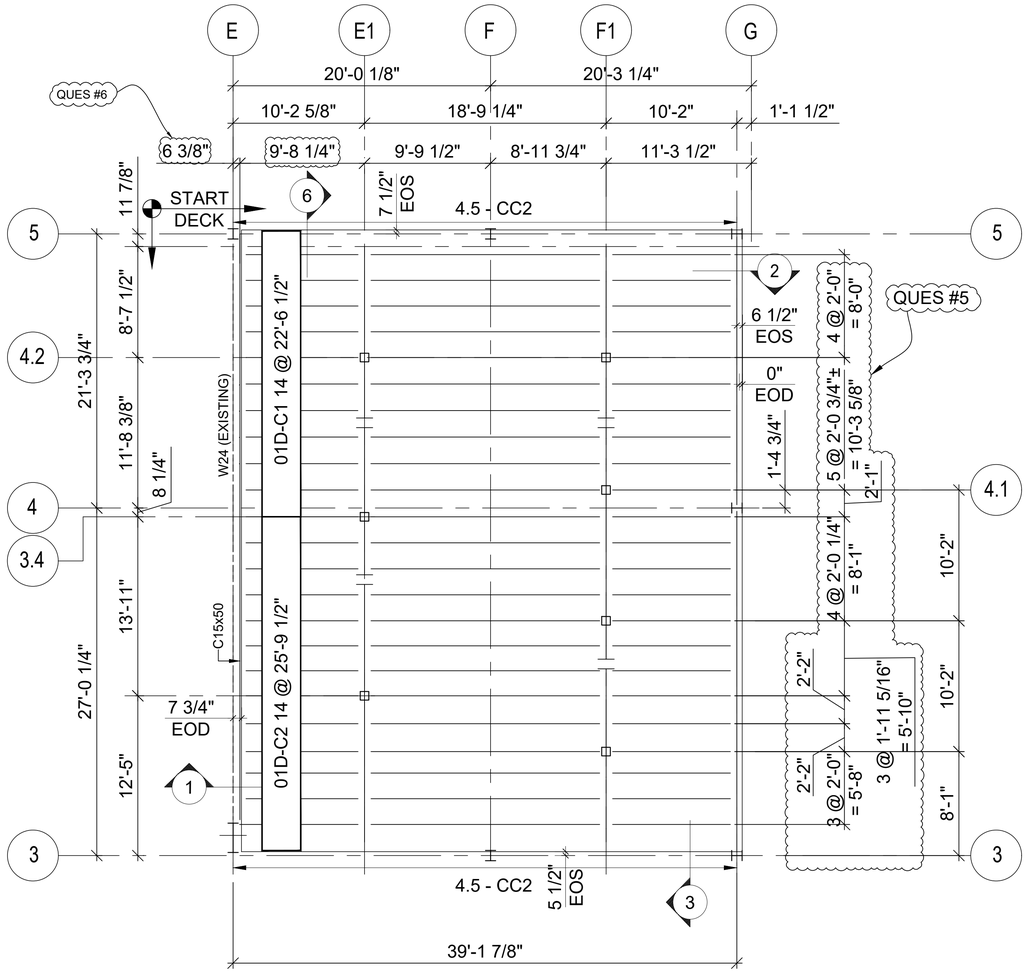

PROJECT NORTH

LEVEL 2.1 FLOOR FRAMING-INFILL DECK PLACEMENT PLAN

SEQ. #01D

REF. : 1/S.103

NOTES:
1. REFERENCE DWG DE1.1 FOR LEGEND, SYMBOLS & ABBREVIATIONS.
2. FOR DECK SECTIONS SEE DE1.3.
3. TOTAL SLAB THICKNESS (3" + 2") = 5" L.W.C.

DECK GAGE & FINISH

FM DECK	UL DECK	MARK	TYPE	GAGE	FINISH	Fy (KSI)	COVER
☐	☐	C	2" COMP.	20	GALV (G60)	50 KSI	36"

DECK FASTENER SCHEDULE

FASTENER PATTERN at SUPPORT:

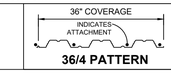

36/4 PATTERN

GENERAL NOTES :

ALLOWABLE CAPACITY FOR DIAPHRAGM ACTION IS IN ACCORDANCE TO SDI PUBLICATION "DIAPHRAGM DESIGN MANUAL". IN THE CASE OF MECHANICAL FASTENERS, THE ERECTION SHALL TAKE CARE IN THE SELECTION OF ELECTRODES AND AMPERAGE TO PROVIDE POSITIVE TIE TO THE SUPPORT WITHOUT CAUSING ANY HIGH AMPERAGE BLOW HOLES. WHEN SIDELAP SCREWS ARE SPEC., THE SPACING SHALL BE EQUALLY DISTANCED WITHOUT HAVING ANY SPACE GREATER THAN 30". MINIMUM SIZE SIDELAP SCREW SHALL BE #10 TEK.

BUILDING ZONE	PATTERN @ INTERMEDIATE SUPPORT	PATTERN @ PERIMETER SUPPORT	FASTENER TYPE @ SUPPORT	SIDELAP FASTENER
FLOOR	36/4	12" O.C.	5/8"Ø PUDDLE WELD	#10 TEK SCREWS @ 36" O.C.

1) POUR STOP SHALL BE WELDED WITH 1" FILLET WELDS @ 12" O. C. MAX ACCORDING TO SDI WITH 2" MIN. BEARING.
2) ALL DECK ACCESSORIES OTHER THAN POUR STOPS SHALL ATTACHED BY EITHER TACK WELDING OR #10 TEK SCREWS (BY OTHERS) @ 24" O.C. MAX ACCORDING TO SDI WITH 2" MIN. BEARING.

REMARKS:

SCREWS - #10 -16x3/4" Type/1 (Side Laps)

Accessories Schedule
Length = 10'-0" TYP. UNO.

MARK	Gage	Profile	A	B	C	Angle
CC2 (Cell Closure)	20	B A	2"	1"		
CR (Mesh Column Closure)		24x24				
TEK/1 (Tek Screws)						

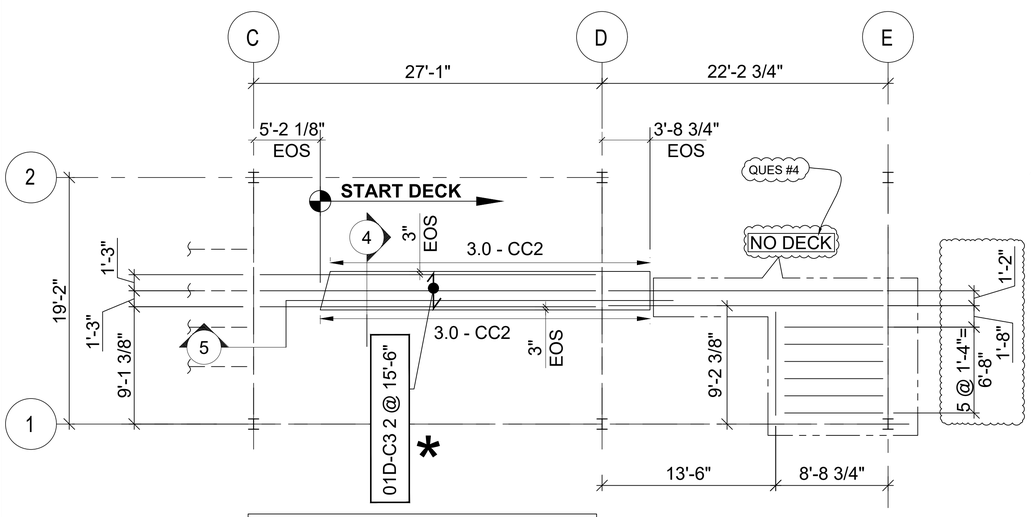

ERECTOR NOTE:
DECK TO BE FIELD CUT AS REQUIRED

PROJECT NORTH

LEVEL 2.2 FLOOR FRAMING-ELEVATOR DECK PLACEMENT PLAN

SEQ. #01D

REF. : 2/S.103

NOTES:
1. REFERENCE DWG DE1.1 FOR LEGEND, SYMBOLS & ABBREVIATIONS.
2. FOR DECK SECTIONS SEE DE1.3.
3. TOTAL SLAB THICKNESS (3" + 2") = 5" L.W.C.

DESIGN METHOD

ASD: ☒ LRFD: ☐ FACTORED: ☐

DECK SHEET LEGEND

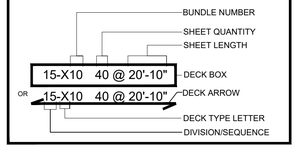

ERECTOR NOTE - DECK SPAN CHART
MAXIMUM ALLOWABLE CLEAR SPANS

IF THESE SPANS ARE EXCEEDED, SHORING OF DECK WILL BE REQUIRED.
SHORING IS BY OTHERS.

SPANS ARE FROM EDGE OF SUPPORT TO EDGE OF SUPPORT FOR FLOOR. (CLEAR SPAN)
FOR ROOF, SPANS ARE FROM C/L OF BEAM TO C/L OF BEAM. SPANS ARE BAED ON SDI CONSTRUCTION LOADING CRITERIA

TOTAL SLAB THICKNESS	DECK GAGE	DECK TYPE	KSI	SINGLE SPAN	DOUBLE SPAN	TRIPLE SPAN	CANTILEVER
5"	20	2" COMP.	50	8' - 3"	10' - 7"	10' - 11"	3' - 5"

BILL OF MATERIALS

List For	FABRICATION
JOB-ID	23-12494
SEQ#	01D
Job Name	GRAND STRAND RETINA
Remarks	

DECK BOM

Type	2" COMP	GA	20	FINISH	G-60	Top Clr / Bot Clr		Cover	36	SQS	21.16

BLANK = GALV ONLY

Bundle Mark	QTY	(ft.)	(in.)	Inches	SQS	LBS.
C1	14 pcs	21'-	11.00"	263.00	9.21	1,749
C2	14 pcs	26'-	3.00"	315.00	11.03	2,095
C3	2 pcs	15'-	6.00"	186.00	0.93	177
	30				21.16	4,020

SCREWS

#10-16 x 3/4-in.	300
#12-14 x 3/4-in.	
#12-24 x 1 1/4-in.	
Weld Washers | 14ga. 5/8-in.	

ACCESSORY TYPES

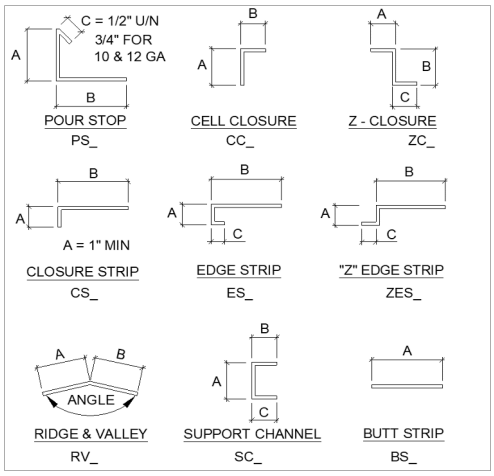

MARK-TYPE	PCS	Gauge	A	B	C	Length
CC2	15	20	2.00	1.00		10
CR	1					

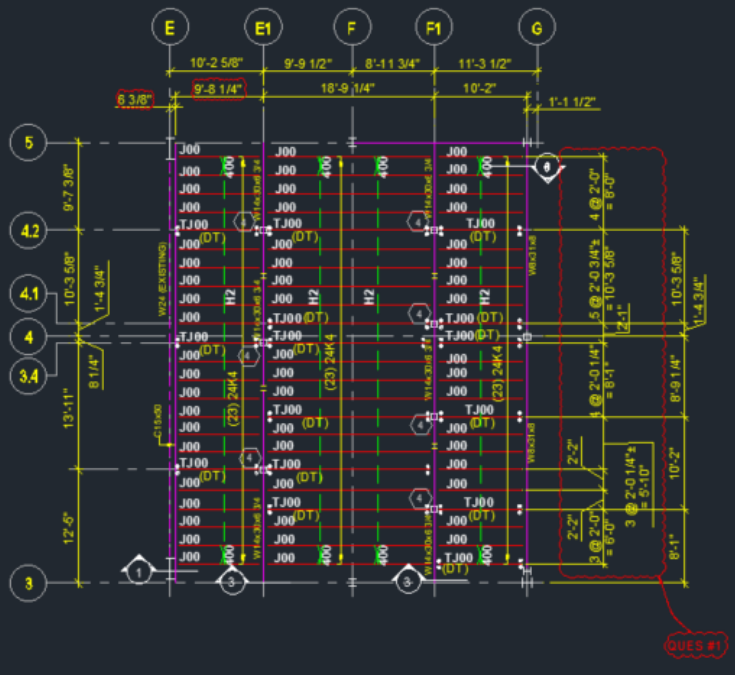
E
E1
F
F1
G
10'-2 5/8"
9'-9 1/2"
8'-11 3/4"
11'-3 1/2"
6 3/8"
9'-8 1/4"
18'-9 1/4"
10'-2"
1'-1 1/2"
5
4.2
4.1
4
3.4
3
9'-7 3/8"
10'-3 5/8"
1'-4 3/4"
8 1/4"
13'-11"
12'-6"
J00
TJ00
(DT)
400
H2
(23) 24K4
W24 (EXISTING)
C15x50
W16x31 x4
W14x30 x4
W8x31 x8
4 @ 2'-0"
= 8'-0"
5 @ 2'-0 3/4"
= 10'-3 5/8"
4 @ 2'-0 1/4"
= 8'-1"
3 @ 2'-0 1/4"
= 5'-10"
3 @ 2'-0"
= 6'-0"
2'-2"
8'-9 1/4"
8'-1"
QUES #1

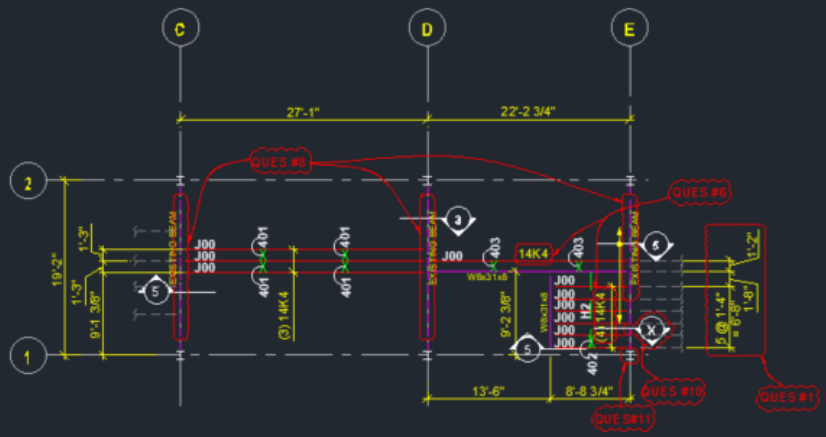
C
D
E
27'-1"
22'-2 3/4"
2
1
19'-2"
1'-3"
9'-1 3/8"
QUES #8
QUES #6
J00
401
(3) 14K4
403
14K4
W8x31x8
9'-2 3/8"
H2
(4) 14K4
402
13'-6"
8'-8 3/4"
5 @ 1'-4"
= 6'-8"
1'-2"
1'-8"
QUES #10
QUES #11
QUES #1

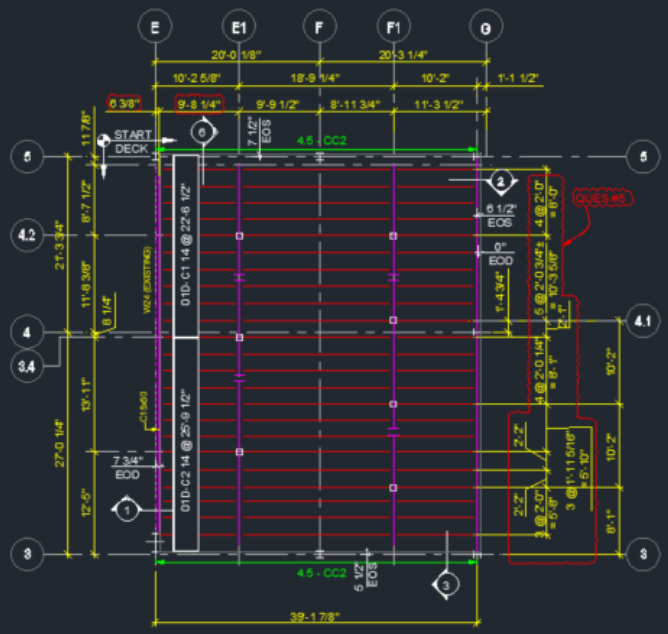
E
E1
F
F1
G
20'-0 1/8"
20'-3 1/4"
10'-2 5/8"
18'-9 1/4"
10'-2"
1'-1 1/2"
6 3/8"
9'-8 1/4"
9'-9 1/2"
8'-11 3/4"
11'-3 1/2"
START DECK
7 1/2" EOS
4.5 - CC2
6 1/2" EOS
0" EOD
QUES #5
01D-C1 14 @ 22'-6 1/2"
01D-C2 14 @ 25'-9 1/2"
7 3/4" EOD
39'-1 7/8"
5
4.2
4
3.4
3
4.1

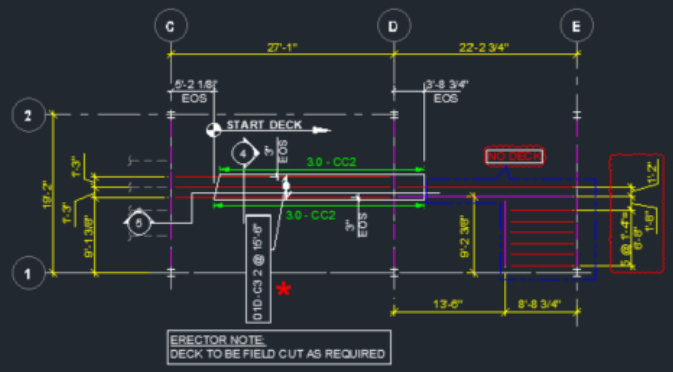
C
D
E
27'-1"
22'-2 3/4"
5'-2 1/8" EOS
3'-8 3/4" EOS
START DECK
3.0 - CC2
3" EOS
01D-C3 2 @ 15'-6"
13'-6"
8'-8 3/4"
ERECTOR NOTE:
DECK TO BE FIELD CUT AS REQUIRED